SUMMIT SERIES

CONDENSERS BY COILMASTER

Coilmaster CORPORATION

CMC-110

TABLE OF CONTENTS

OVERVIEW

The **Coilmaster Summit** line of air-cooled condensers offers the most technologically advanced product on the market today. Incorporating our world-class resources of development through manufacturing, we are proud to offer our comprehensive line of condensers that are the pinnacle of performance and reliability. Incorporating VFD-compatible, energy-efficient motors, they are widely used on projects worldwide for process, refrigeration, and air-conditioning applications.

Our expanded range of unit sizes from single-fan to fourteen-fan units cover capacities from 2 to 240 nominal tons. Rigorous factory pressure testing and run testing insure that Summit units provide reliable performance and longevity that exceed customer requirements. Units are crafted by employees that take great pride in building units with unsurpassed quality standards in every manufacturing process.

Units can be provided with the most basic of capacity control options for standard applications. Our technicians are just as skilled in incorporating I/O boards for refrigeration rack controllers and building control systems, VFD' s, and head pressure control valves for more precise control. Unsurpassed expertise in control options gives our customers the confidence that we will meet their requirements at any level.

The extensive offering of footprints and fan arrangements ensure that we can provide a condenser for most any application. Horizontal air flow configurations are available up to a 2x3 or 1x5 fan arrangement to ensure fit in limited-space installations.

UNIT FEATURES/OPTIONS

MULTIPLE-FAN UNITS

All multiple-fan units have full-height, individually baffled coil sections for each fan to prevent air bypass and wind-milling of fans when not in operation. Baffled fan sections insure cabinet structural integrity.

FAN MOTORS

All fan motors are supplied with individual 12 gauge motor rails that are structurally riveted to the coil baffles. Motor rails insure vibration-free operation of the fans and provide additional support of the cabinet.

FANS

Fans operate in a full-height venturi-type fan panel to ensure maximum air flow and efficiency. Fan panels offer vibration-free operation, and are removable for full access to the coil.

SUMMARY OF UNIT FEATURES

COILS	
Fully-supported coils with heavy-gauge steel casings	Standard
Utilize technologically-advanced fin designs	Standard
Spin-closed header ends	Standard
3/8" and ½" O.D. heavy-wall tubes expanded into aluminum fins	Standard
Tested at 550 psig with dry nitrogen	Standard
Shipped with nitrogen holding charge	Standard
Coated coils for corrosion resistance	Optional
Multi-circuiting and sub-cooling circuits	Optional
Two-section manifolding for dual fan-width units	Standard
Special fin materials : .0075 and .010 thick aluminum	Optional
.006 and .0075 thick copper	Optional
Polyester-coated fin stock	Optional
10 fins per inch fin spacing	Standard
8,12,14 fins per inch fin spacing	Optional
FAN SECTION	
High-efficiency aluminum fan blades with welded and painted steel hubs	Standard
Fully baffled fan sections	Standard
12 gauge structurally-riveted motor rails	Standard
TEAO VFD-compatible energy-efficient motors (permanently lubricated)	Standard
Inherent overload protected motors	Standard
Venturi-formed fan panels for optimum air flow	Standard
CONTROL PANEL	
NEMA 3R weatherproof electrical enclosure with easy access	Standard
Head pressure or ambient temperature fan cycling controls	Optional
Fused or non-fused disconnect switch (stand alone or thru-the-door)	Optional
Individual or paired motor fusing	Optional
VFD controls or refrigeration rack controllers	Optional
24 or 120V control circuits	Optional
Building control interfaces	Optional
Control terminal blocks for external controls	Optional
GENERAL CONSTRUCTION	
Heavy gauge G90 galvanized frame and cabinet	Standard
Vertical air discharge	Standard
Horizontal air discharge (up to 6 fan units)	Optional
Aluminum cabinet with steel frame	Optional
Stainless steel cabinet	Optional
Telescoping legs for convenient installation	Standard
Extended height legs with cross-bracing for increased ground clearance	Optional
Base frames for compressor mounting	Optional
ETL and ETL Canada agency listed units	Standard

NOMENCLATURE

C S H - S 03 - 026

C - Coilmaster

S - Summit Series

Motor:

G - 1140 RPM 1/2 HP

H - 1140 RPM 1-1/2 HP

Width:

S - Single Wide

D - Double Wide

# of Fans (01-14)

Standard Capacity
(MBH/°TD, R-410a @ 10 FPI)

CONDENSER SELECTION

Single-Circuit Selection Procedure

Air cooled condenser ratings are based on the total heat rejections of the refrigeration or air conditioning system. The total heat of rejection (THR) is the sum of the net refrigeration effect and the heat of compression added to the refrigerant in the compressor.

Since the heat of compression varies with the design of the compressor, the manufacturer's data should be used whenever possible. However, if the data is not available from the manufacturer, factors may be used from tables 1 and 2 to determine the heat of compression. The factors are to be used with the compressor capacity (or net refrigeration effect) to calculate the total heat rejection.

Since elevation above sea level has an effect on the performance of air cooled condensers, correlation factors are used to adjust capacity to sea level conditions. Divide the required capacity by the appropriate correction factor in table 3, and select the condenser from any of the capacity tables.

SELECTION EXAMPLE

Given Conditions:
Ambient Air Temperature - 95°F
Maximum Condensing Temperature - 115°F
Evaporative Temperature - 35°F
Refrigerant - R-410a
Compressor Capacity – 351,000 BTU/h
Compressor Type - Suction Cooled Semi-Hermetic
Altitude – 2000 ft

Step 1: Estimate the total heat of rejection of the compressor

Use the factor from table 2 for 115°F condensing temperature and 35°F evaporative temperature to calculate the heat of rejection required.

$$351{,}000\ {}^{BTU}/_{h} * 1.27 = 445{,}770\ {}^{BTU}/_{h}$$

Step 2: Correct the calculated THR for the given altitude

Use the factor from table 3 for 2000 ft and multiply by the THR calculated in the previous step. Divide by 100 to convert to MBH.

$$445{,}770\ {}^{BTU}/_{h} * 1.05 = 468{,}059\ {}^{BTU}/_{h} \approx 468\ \text{MBH}$$

Step 3: Calculate the temperature difference (TD) of the condenser

Subtract the ambient temperature from the condensing temperature

$$115°F - 95°F = 20°F$$

Step 4: Select appropriate condenser from table 4

Condenser capacities are listed in MBH / 1° TD. To obtain this number, divide the THR by the calculated TD.

$$\frac{468\ MBH}{20°F} = 23.4\ {}^{MBH}/1°$$

Looking this number up in table 4 gives a selection of unit CSH-S03-026.

Multi-Circuiting Selection Procedure

Coilmaster also offers condensers with more than one refrigerant circuit. These separate circuits can be sized to fit any application needed by using the selection procedure below.

To select a unit for multiple compressor circuits, follow the same steps to find the MBH / 1° TD as before for each circuit. Add each of these values together to get the total MBH / 1° TD for the multi-circuit condenser, and select the appropriate unit. When ordering, provide Coilmaster with the calculated values of each compressor.

Table 1: Heat Rejection Factors - Open Compressors

Evap. Temp. °F	Condensing Temperature °F								
	90	95	100	105	110	115	120	125	130
-30	1.37	1.39	1.42	1.44	1.47	+	+	+	+
-20	1.33	1.35	1.37	1.39	1.42	1.44	1.47	+	+
-10	1.28	1.30	1.32	1.34	1.37	1.39	1.42	1.44	1.47
0	1.24	1.26	1.28	1.30	1.32	1.34	1.37	1.39	1.41
10	1.21	1.23	1.24	1.26	1.28	1.30	1.32	1.34	1.36
20	1.17	1.18	1.20	1.22	1.24	1.26	1.28	1.30	1.32
30	1.14	1.15	1.17	1.18	1.20	1.22	1.24	1.25	1.27
40	1.12	1.14	1.15	1.16	1.17	1.18	1.20	1.21	1.23
50	1.09	1.11	1.12	1.13	1.14	1.16	1.17	1.19	1.20

Heat Rejection Factors - Suction Cooled
Table 2: Semi-Hermetic Compressors

Evap. Temp. °F	Condensing Temperature °F								
	90	95	100	105	110	115	120	125	130
-40	1.66	1.70	1.73	1.76	1.80	1.90	2.00	+	+
-35	1.61	1.64	1.68	1.70	1.74	1.82	1.90	+	+
-30	1.57	1.60	1.62	1.65	1.68	1.74	1.80	+	+
-25	1.53	1.56	1.58	1.60	1.63	1.67	1.72	+	+
-20	1.49	1.51	1.53	1.55	1.58	1.61	1.65	+	+
-15	1.46	1.48	1.50	1.51	1.54	1.57	1.61	+	+
-10	1.42	1.44	1.46	1.48	1.50	1.53	1.57	1.60	1.64
-5	1.39	1.41	1.43	1.45	1.47	1.50	1.53	1.56	1.60
0	1.36	1.38	1.40	1.42	1.44	1.47	1.50	1.53	1.56
5	1.33	1.35	1.37	1.39	1.41	1.43	1.46	1.49	1.52
10	1.31	1.32	1.34	1.36	1.38	1.40	1.43	1.46	1.49
15	1.28	1.30	1.32	1.33	1.35	1.37	1.40	1.43	1.46
20	1.26	1.27	1.29	1.31	1.33	1.35	1.37	1.40	1.43
25	1.24	1.25	1.27	1.29	1.31	1.33	1.35	1.37	1.40
30	1.22	1.23	1.25	1.26	1.28	1.30	1.32	1.34	1.37
35	1.20	1.21	1.23	1.25	1.26	1.27	1.29	1.31	1.34
40	1.18	1.19	1.21	1.23	1.24	1.25	1.27	1.29	1.31
45	1.16	1.17	1.19	1.21	1.22	1.23	1.25	1.26	1.28
50	1.14	1.15	1.17	1.19	1.20	1.22	1.23	1.24	1.26

Table 3: Elevation Correction Factors

Altitude	Correction Factor	Altitude	Correction Factor
0	1	5,000	1.12
1,000	1.02	6,000	1.15
2,000	1.05	7,000	1.17
3,000	1.07	10,000	1.21
4,000	1.1	12,000	1.26

UNIT CAPACITIES

Table 4: Condenser Capacity for Standard Models and Alternate Spacing

Model	MBH / 1° TD| R-410a Fin Spacing				MBH / 1° TD| R-404a Fin Spacing			
	8	10	12	14	8	10	12	14
Single Fan Width Units - 22" Fans								
CSG-S01-1.8	1.6	**1.8**	1.9	2.1	1.1	**1.2**	1.3	1.4
CSG-S01-3.1	2.8	**3.1**	3.3	3.4	2.5	**2.7**	2.9	2.9
CSG-S02-4.1	3.6	**4.1**	4.5	4.9	3.0	**3.4**	3.7	4.0
CSG-S02-5.7	5.1	**5.7**	6.1	6.4	4.6	**5.1**	5.5	5.8
CSG-S02-6.8	6.2	**6.8**	7.1	7.3	5.8	**6.3**	6.7	6.8
Single Fan Width Units - 30" Fans								
CSH-S01-007	6.3	**7.1**	7.8	8.2	5.9	**6.6**	7.2	7.6
CSH-S01-008	7.6	**8.4**	9	9.4	7.2	**7.9**	8.5	8.9
CSH-S02-011	9.4	**10.8**	12	12.9	8.7	**9.9**	10.9	11.8
CSH-S02-015	13	**14.6**	15.8	16.8	12.1	**13.6**	14.7	15.6
CSH-S02-017	15.6	**17.2**	18.3	19	14.7	**16.2**	17.1	17.8
CSH-S03-022	19.4	**21.6**	23.5	24.9	18	**20.1**	21.8	23.1
CSH-S03-026	23.3	**25.8**	27.6	28.7	22.1	**24.4**	26	27.1
CSH-S04-030	26.6	**29.8**	32.3	34.2	25.4	**28.2**	30.5	32.1
CSH-S04-035	32	**35.4**	37.9	39.7	30.8	**33.9**	36.3	38.1
CSH-S05-037	33	**36.8**	40	43.4	31.3	**35.1**	38	40.2
CSH-S05-045	40.4	**44.6**	47.7	49.9	39	**42.9**	45.9	47.9
CSH-S06-054	48.6	**53.5**	57.1	59.8	46.7	**51.3**	54.6	57.1
CSH-S07-062	56.4	**62**	66	69	53.9	**58.9**	62.7	65.2
Double Fan Width Units - 30" Fans								
CSH-D04-022	18.8	**21.6**	23.9	25.9	17.4	**19.9**	21.9	23.6
CSH-D04-029	25.9	**29.1**	31.7	33.6	24.2	**27.1**	29.4	31.1
CSH-D04-034	31.3	**34.4**	36.7	38	29.5	**32.3**	34.3	35.5
CSH-D06-043	38.7	**43.3**	46.9	49.8	35.9	**40.2**	43.6	46.1
CSH-D06-052	46.7	**51.7**	55.2	57.2	44.1	**48.7**	52	54.1
CSH-D08-060	53.3	**59.6**	64.6	68.3	50.8	**56.5**	61	64.3
CSH-D08-071	64.1	**70.8**	75.7	79.9	61.6	**67.9**	72.7	76.2
CSH-D10-074	65.9	**73.6**	80	84.8	62.6	**70.1**	75.9	80.4
CSH-D10-089	80.8	**89.2**	95.4	99.8	77.9	**85.8**	91.7	95.9
CSH-D12-107	97.2	**107**	114.2	119.6	93.4	**102.5**	109.2	114.1
CSH-D14-124	112.9	**123.9**	132	138	107.8	**117.9**	125.3	130.4

All Standard Models Use 10 FPI
Bold Indicates Standard Model

UNIT CAPACITIES

Table 5: Condenser Capacity at Commom Temperature Differences (MBH @ 10 FPI)

Single Fan Width Units	TD					
22″ Fans	1	10	15	20	25	30
CSG-S01-1.8	1.8	17.6	26.4	35.2	44.0	52.8
CSG-S01-3.1	3.1	31.2	46.7	62.3	77.9	93.5
CSG-S02-4.1	4.1	41.3	62.0	82.6	103.3	123.9
CSG-02-5.7	5.7	57.1	85.7	114.2	142.2	171.3
CSG-S02-6.8	6.8	68.0	101.9	135.9	169.9	203.9
Single Fan Width Units	**TD**					
30″ Fans	**1**	**10**	**15**	**20**	**25**	**30**
CSH-S01-007	7.1	71.2	106.7	142.3	177.9	213.5
CSH-S01-008	8.4	84.5	126.7	168.9	211.1	253.4
CSH-S01-011	10.8	108.0	162.0	216.0	270.0	323.9
CSH-S01-015	14.6	145.6	218.4	291.3	364.1	436.9
CSH-S01-017	17.2	172.2	258.3	344.5	430.6	516.7
CSH-S01-022	21.6	216.3	324.4	432.6	540.7	648.9
CSH-S01-026	25.8	258.3	387.4	516.5	645.7	774.8
CSH-S01-030	29.8	298.0	447.1	596.1	745.1	894.1
CSH-S01-035	35.4	354.1	531.1	708.2	885.2	1062.3
CSH-S01-037	36.8	368.0	551.9	735.9	919.9	1103.9
CSH-S01-045	44.6	445.8	668.7	891.6	1114.5	1337.4
CSH-S01-054	53.5	534.8	802.1	1069.5	1336.9	1604.3
CSH-S01-062	62.0	619.7	929.6	1239.4	1549.3	1859.2
Double Fan Width Units	**TD**					
30″ Fans	**1**	**10**	**15**	**20**	**25**	**30**
CSH-D04-022	21.6	216.0	324.0	431.9	539.9	647.9
CSH-D04-029	29.1	291.3	436.9	582.5	728.1	873.8
CSH-D04-034	34.4	344.5	516.7	688.9	861.1	1033.4
CSH-D06-043	43.3	432.6	648.9	865.2	1081.5	1297.7
CSH-D06-052	51.7	516.5	774.8	1033.0	1291.3	1549.6
CSH-D08-060	59.6	596.0	894.0	1192.0	1490.0	1788.0
CSH-D08-071	70.8	708.2	1062.3	1416.4	1770.5	2124.6
CSH-D10-074	73.6	735.9	1103.9	1471.8	1839.8	2207.7
CSH-D10-089	89.2	891.6	1337.4	1783.3	229.1	2674.9
CSH-D12-107	107.0	1069.5	1604.3	2139.0	2673.8	3208.5
CSH-D14-124	123.9	1239.4	1859.1	2478.8	3098.5	3718.2

UNIT SPECIFICATIONS

Tabel 6: Technical Information

Model	Fan Data		Motor Data										Sound Data (dB @ 10')	Weight (Lbs)
				Full Load Amps			Minimum Circuit Ampacity			Max Over-Current Protection				
	Fan Qty	Total CFM	Motor HP	208/ 230 V 3 PH	460 V 3PH	575 V 3PH	208/ 230 V 3PH	460 V 3PH	575 V 3PH	208/ 230 V 3PH	460 V 3PH	575 V 3PH		
Single Fan Width Units - 22" Fans														
CSG-S01-1.8	1	4065	1/2	2.2	1.1	0.9	15.0	15.0	15.0	15.0	15.0	15.0	71	291
CSG-S01-3.1	1	3477	1/2	2.2	1.1	0.0	15.0	15.0	15.0	15.0	15.0	15.0	71	311
CSG-S02-4.1	2	8130	1/2	4.4	2.2	1.8	15.0	15.0	15.0	15.0	15.0	15.0	73	459
CSG-S02-5.7	2	7515	1/2	4.4	2.2	1.8	15.0	15.0	15.0	15.0	15.0	15.0	73	479
CSG-S02-6.8	2	6954	1/2	4.4	2.2	1.8	15.0	15.0	15.0	15.0	15.0	15.0	73	499
Single Fan Width Units - 30" Fans														
CSH-S01-007	1	8961	1-1/2	6.5	3.3	2.6	15.0	15.0	15.0	15.0	15.0	15.0	74	478
CSH-S01-008	1	8647	1-1/2	6.5	3.3	2.6	15.0	15.0	15.0	15.0	15.0	15.0	74	502
CSH-S02-011	2	18553	1-1/2	13.0	6.5	5.2	15.0	15.0	15.0	25.0	15.0	15.0	76	729
CSH-S02-015	2	17921	1-1/2	13.0	6.5	5.2	15.0	15.0	15.0	25.0	15.0	15.0	76	776
CSH-S02-017	2	17293	1-1/2	13.0	6.5	5.2	15.0	15.0	15.0	25.0	15.0	15.0	76	824
CSH-S03-022	3	26882	1-1/2	19.5	9.8	7.8	21.1	15.0	15.0	30.0	15.0	15.0	78	1074
CSH-S03-026	3	25940	1-1/2	19.5	9.8	7.8	21.1	15.0	15.0	30.0	15.0	15.0	78	1146
CSH-S04-030	4	36492	1-1/2	26.0	13.0	10.4	27.6	13.8	15.0	35.0	20.0	15.0	80	1432
CSH-S04-035	4	35398	1-1/2	26.0	13.0	10.4	27.6	13.8	15.0	35.0	20.0	15.0	80	1546
CSH-S05-037	5	45615	1-1/2	32.5	16.3	13.0	34.1	17.1	13.7	45.0	25.0	20.0	81	1756
CSH-S05-045	5	44247	1-1/2	32.5	16.3	13.0	34.1	17.1	13.7	45.0	25.0	20.0	81	1888
CSH-S06-054	6	53097	1-1/2	39.0	19.5	15.6	40.6	20.3	16.3	50.0	25.0	20.0	82	2229
CSH-S07-062	7	61946	1-1/2	45.5	22.8	18.2	47.1	23.6	18.9	55.0	30.0	25.0	83	2570
Double Fan Width Units - 30" Fans														
CSH-D04-022	4	37107	1-1/2	26.0	13.0	10.4	27.6	13.8	15.0	35.0	20.0	15.0	80	1502
CSH-D04-029	4	35842	1-1/2	26.0	13.0	10.4	27.6	13.8	15.0	35.0	20.0	15.0	80	1598
CSH-D04-034	4	34586	1-1/2	26.0	13.0	10.4	27.6	13.8	15.0	35.0	20.0	15.0	80	1695
CSH-D06-043	6	53763	1-1/2	39.0	19.5	15.6	40.6	20.3	16.3	50.0	25.0	20.0	82	1980
CSH-D06-052	6	51879	1-1/2	39.0	19.5	15.6	40.6	20.3	16.3	50.0	25.0	20.0	82	2267
CSH-D08-060	8	72983	1-1/2	52.0	26.0	20.8	53.6	26.8	21.5	65.0	35.0	25.0	83	2411
CSH-D08-071	8	70796	1-1/2	52.0	26.0	20.8	53.6	26.8	21.5	65.0	35.0	25.0	83	2967
CSH-D10-074	10	91229	1-1/2	65.0	32.5	26.0	66.6	33.3	26.7	75.0	40.0	30.0	84	3168
CSH-D10-089	10	88495	1-1/2	65.0	32.5	26.0	66.6	33.3	26.7	75.0	40.0	30.0	84	3644
CSH-D12-107	12	106194	1-1/2	78.0	39	31.2	79.6	39.8	31.9	90.0	45.0	35.0	84	3893
CSH-D14-124	14	123893	1-1/2	91.0	45.5	36.4	92.6	46.3	37.1	100.0	50.0	40.0	85	5345

DIMENSIONAL DATA

G Series Condenser Dimensions (22” Fans)

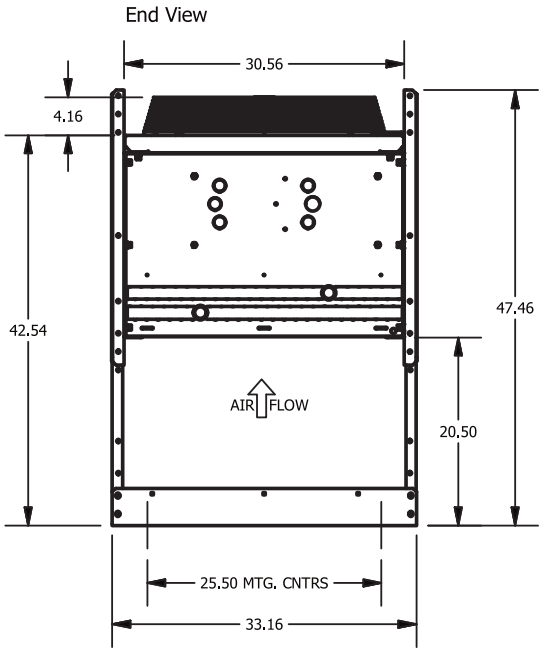

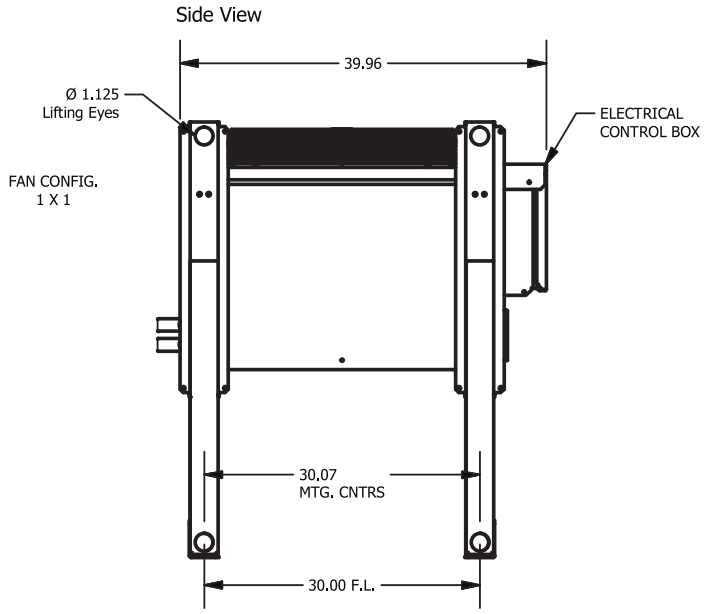

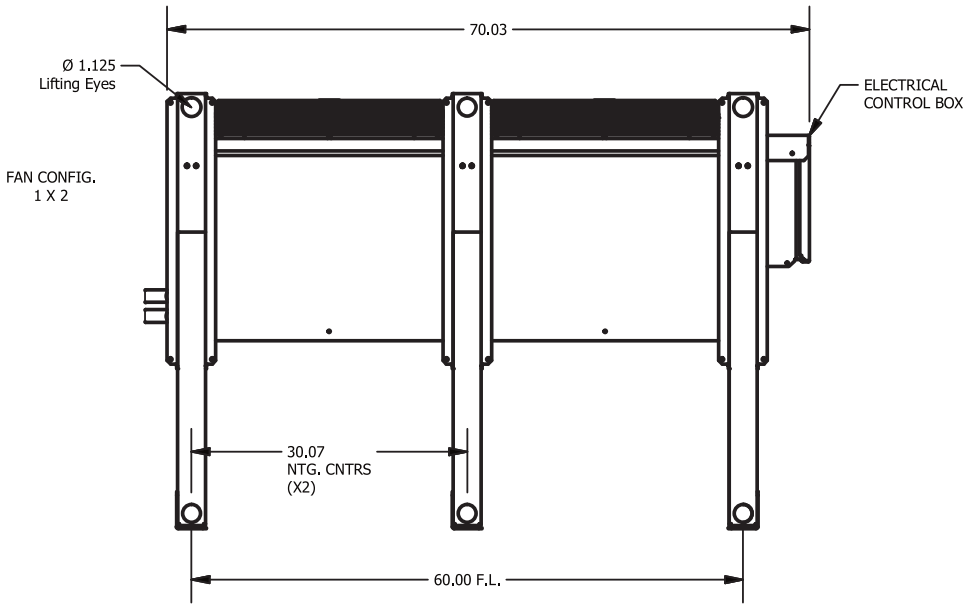

t: 901-877-333 | f: 901-877-3335 | coilmastercorp.com

H Series Condenser Dimensions (30” Fans)

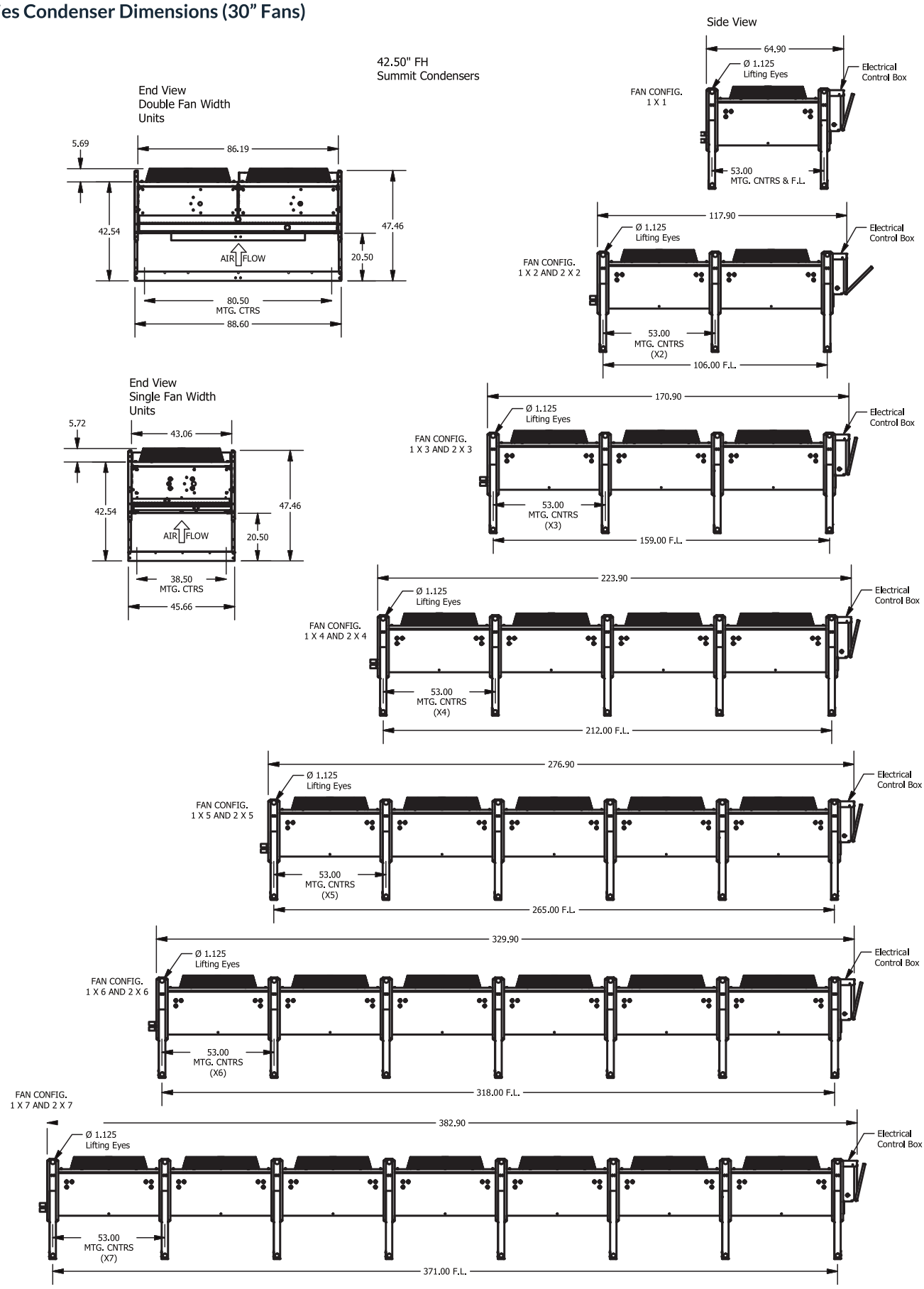

Mounting Detail for Summit Series Units

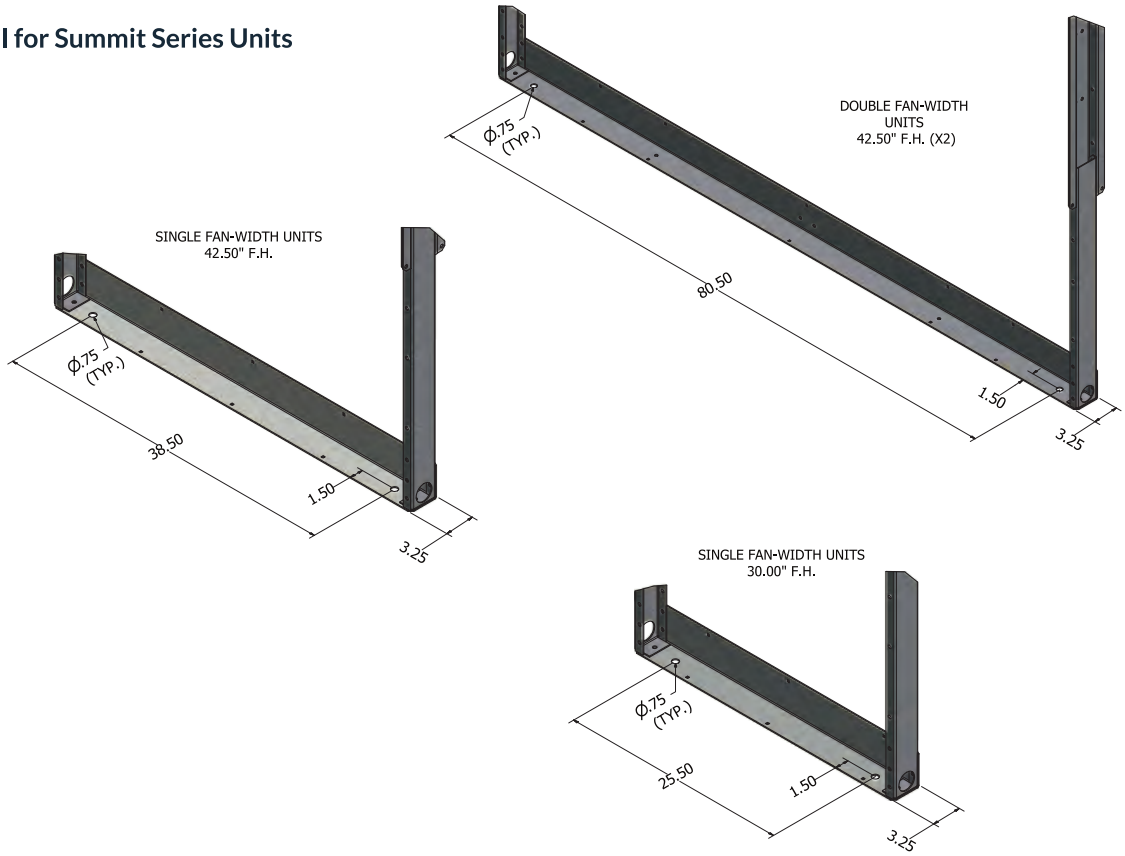

Horizontal Airflow Configurations (22" Fans)

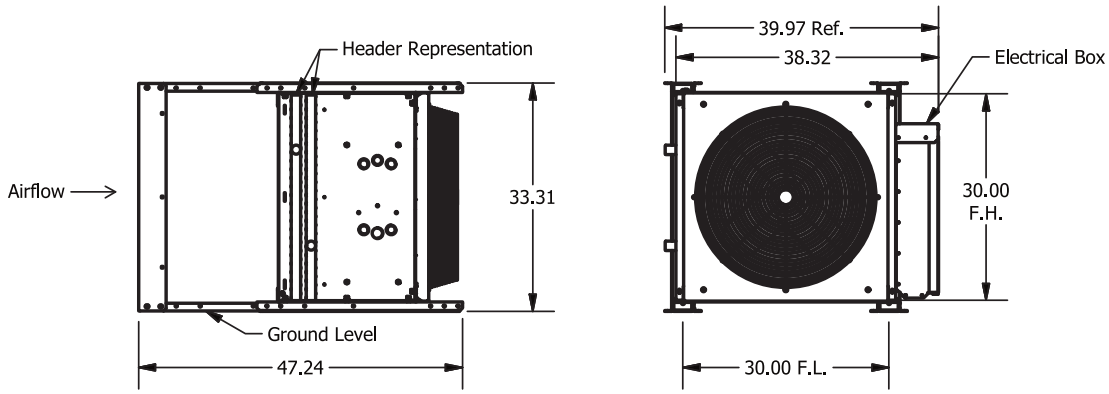

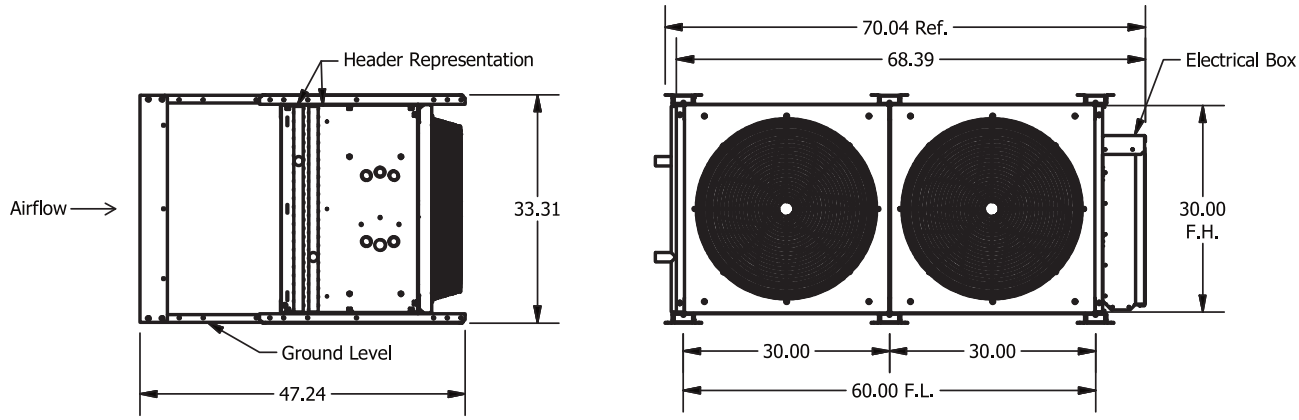

t: 901-877-333 | f: 901-877-3335 | coilmastercorp.com

Horizontal Airflow Configurations (30” Fans)

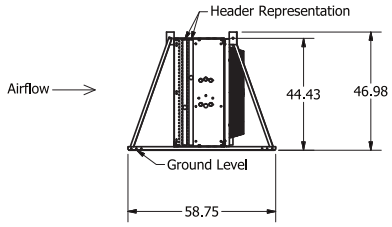

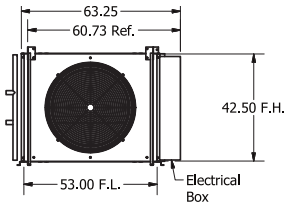

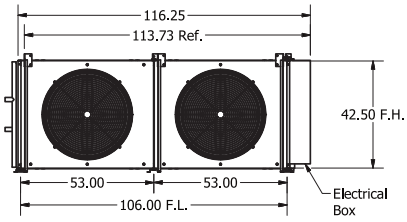

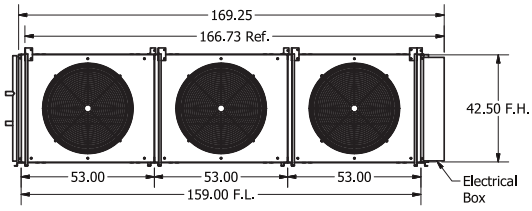

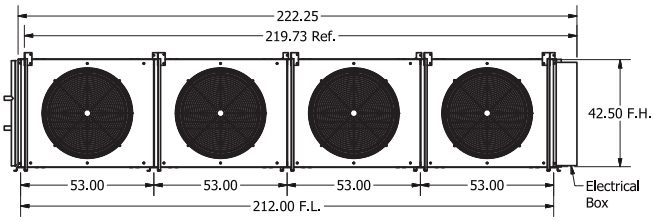

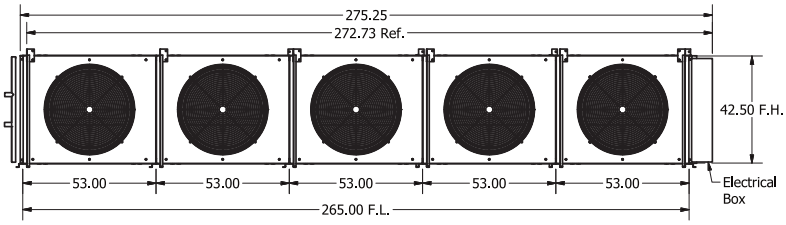

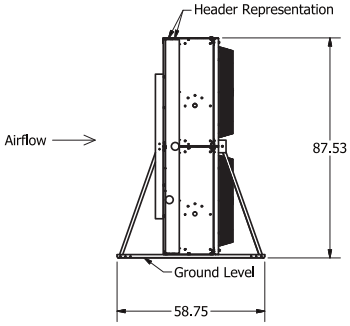

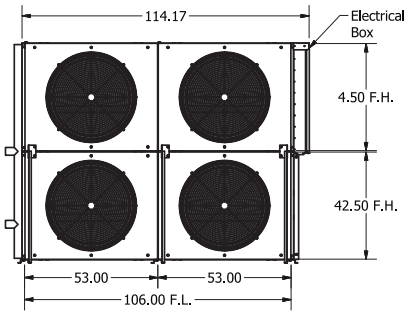

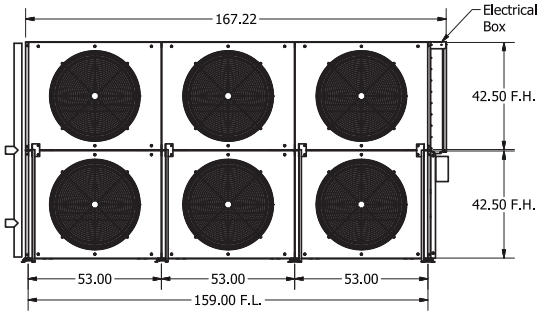

TYPICAL WIRING DIAGRAM

Legend		
MTR-1A-7B	1140 RPM Motor	Standard
PB1	Power Block	Standard
FC1-FC3	Fan Cycling Control	78
CT1	Control Transformer (24V)	80
PCF	Primary Control Fusing	81
SCF	Secondary Control Fusing	82
M1-M7	Motor Contactors	83
FB1-FB7	Motor Fuse Blocks	Motor Fuse Package
FD1	Fused Disconnect Switch	Disconnect Package (Non-Fused Disconnect Also Available)

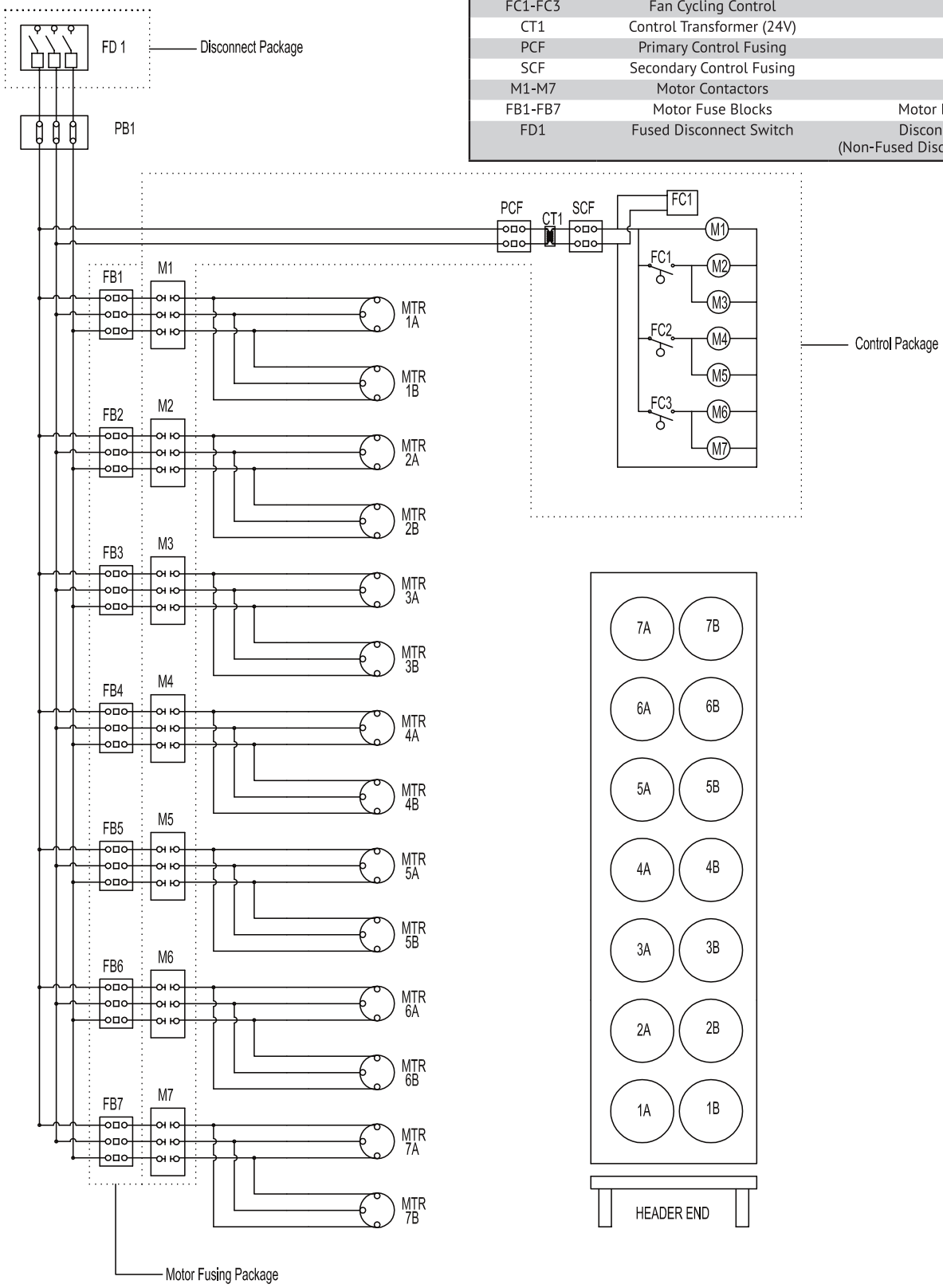

t: 901-877-333 | f: 901-877-3335 | coilmastercorp.com

CONDENSER REFRIGERANT CHARGE

Table 7: Additional Charge for Flooded Condenser Operation, lbs

Model	Summer Charge	25° ΔT					20° ΔT					15° ΔT					10° ΔT				
		60	40	20	0	-20	60	40	20	0	-20	60	40	20	0	-20	60	40	20	0	-20
CSG-S01-1.8	2	1	2	3	3	4	1	3	3	3	4	2	3	3	4	4	3	3	4	4	4
CSG-S01-3.1	4	2	4	5	6	6	2	5	6	6	7	3	6	6	7	7	5	6	7	7	7
CSG-S02-4.1	4	1	3	5	5	6	1	4	5	6	6	3	5	6	6	6	4	5	6	6	6
CSG-S02-5.7	6	2	5	7	8	9	2	6	8	9	9	4	7	9	9	10	6	8	9	10	10
CSG-S02-6.8	7	3	9	11	12	13	3	10	12	13	14	8	11	13	14	14	10	13	14	14	14
CSH-S01-007	8	2	6	9	10	11	2	8	10	11	12	5	9	11	12	12	8	10	12	12	12
CSH-S01-008	10	2	8	11	14	14	2	10	13	14	15	7	12	14	15	15	10	14	15	15	15
CSH-S02-011	9	3	10	13	16	16	4	11	14	15	16	7	13	15	15	16	11	15	15	16	16
CSH-S02-015	13	6	15	21	24	25	6	18	23	25	26	13	21	24	25	26	18	23	25	25	26
CSH-S02-017	16	9	22	18	32	32	9	24	32	32	33	18	29	32	33	33	23	31	32	32	33
CSH-S03-022	19	8	25	33	36	45	10	29	34	38	45	20	32	37	39	40	28	35	38	38	39
CSH-S03-026	24	10	31	42	48	49	12	36	48	48	48	25	41	47	48	49	35	47	48	48	49
CSH-S04-030	44	14	49	68	77	84	18	59	74	82	87	39	68	79	87	88	58	77	87	87	88
CSH-S04-035	58	16	63	85	104	106	19	73	95	105	106	50	85	105	112	113	72	101	112	112	113
CSH-S05-037	53	25	70	92	103	107	28	81	97	107	107	56	91	103	111	113	78	100	110	116	116
CSH-S05-045	71	23	81	109	132	134	28	94	122	132	133	64	110	131	143	143	92	129	141	143	143
CSH-S06-054	82	27	100	138	158	164	36	118	152	164	164	80	135	161	164	165	114	158	158	164	165
CSH-S07-062	92	43	124	167	194	196	50	143	184	194	196	99	165	192	194	196	137	189	190	195	196
CSH-D04-022	18	6	20	26	32	32	8	22	28	30	32	14	26	30	30	32	22	30	30	32	32
CSH-D04-029	26	12	30	42	49	20	12	36	46	50	52	26	42	48	50	52	36	46	50	50	52
CSH-D04-034	32	18	44	56	64	64	18	48	64	64	66	36	58	64	66	66	46	62	64	64	66
CSH-D06-043	38	16	50	66	72	90	20	58	68	76	90	40	64	74	78	80	56	70	76	76	78
CSH-D06-052	48	20	62	84	96	98	24	72	96	96	96	50	82	94	96	98	70	94	96	96	96
CSH-D08-060	88	28	98	136	154	168	36	118	148	164	174	78	136	158	174	176	116	154	174	174	176
CSH-D08-071	116	32	126	170	208	212	38	146	190	210	212	100	170	210	224	226	144	202	224	224	226
CSH-D10-074	106	50	140	184	206	214	56	162	194	214	214	112	182	206	222	226	156	200	220	232	232
CSH-D10-089	142	46	162	218	264	268	56	188	244	264	266	128	220	262	286	286	184	258	282	286	286
CSH-D12-107	164	54	200	276	316	328	72	236	304	328	328	160	270	322	328	330	228	316	316	328	330
CSH-D14-124	184	86	248	334	388	392	100	286	368	388	392	198	330	384	388	392	274	378	380	390	392

Table 8: Alternate Refrigerant Factors

R-134A	1.03
R-407C	0.99
R-404A	0.95
R-4O7A	1
R-507A	0.95
R-22	1.04

Coilmaster CORPORATION

Reliability in Heat Transfer Products Since 1999

440 Industrial Drive Moscow, TN 38057
t: 901-877-333 | f: 901-877-3335
coilmastercorp.com | sales@coilmastercorp.com